FIRE DOOR ACCESSORIES

BLUE-WINGED TEAL - Breeds primarily in the northern prairies and parklands of central North America. Their relative abundance generally increases from west to east, and north to south within the Prairie Pothole Region. Nesting habitat includes wetland areas within grasslands and marshes.

NGP
NATIONAL GUARD
PRODUCTS

Fire Door Accessories Product Index

Page

Door Gap Gauge FDA8

Fire Door Thru- Bolts FDA6

Gap Solution for Excessive Fire Door and Frame Clearances — 90 Minute FDA3
- Intumescent Seal
- TPE Seal
- Steel Stop Extender

NGP Edge Intumescent Door Cap. FDA4

Gap Solution for Excessive Fire Door Bottom Undercut/Clearance — 90 Minute. . . . FDA5
- NGP-Edge® Intumescent Door Shoe

Inline Mounting Bracket. FDA9
- 600D-28

Steel Hinge Shims FDA7

Strike Shims — 90 Minute FDA6
- 9225
- 9275

Numerical Index:

FDTB FDA6
GAP GAUGE FDA8
GAP90™ FDA3
GAP90DKB™ FDA3
HS-1 . . . . . FDA7
5075 . . . . . FDA3
600D-28 . . . . . FDA9
9225 . . . . . FDA6
9275 . . . . . FDA6
9590 . . . . . FDA5
9990 . . . . . FDA4

Rating Symbols Legend

POSITIVE PRESSURE - CERTIFIED by UL to ANSI/UL10C; complies with IBC, NFPA 80 and NFPA 252 for application to Hollow Metal fire doors rated up to 3 Hrs., and Wood fire doors rated up to 90 minutes (some ratings vary as noted).

CERTIFIED by UL to CAN/ULC-S104 and ANSI/UL10B; complies with NFPA 80 and NFPA 252 for application to Hollow Metal fire doors rated up to 3 Hrs., and Wood fire doors rated up to 90 minutes (some ratings vary as noted).

SMOKE & DRAFT CONTROL GASKETING, Certified by UL to ANSI/UL10C and ANSI/UL 1784 Category 'H'; complies with IBC and NFPA 105 for use on 'S' labeled Positive Pressure Hollow Metal fire doors rated up to 3 hours, and Wood fire doors rated up to 90 minutes (some ratings vary as noted).

ACOUSTICAL TESTED to ASTM E90 Standard Test Method for Laboratory Measurement of Airborne Sound Transmission Loss of Building Partitions and Elements, and ASTM E2235 Standard Test Method for Determination of Decay Rates for use in Sound Insulation Test Methods. Refer to information on pages G4 and G5 for test result data.

AIR INFILTRATION TESTED to ASTM E283, Standard Test Method for Determining Rate of Air Leakage Through Exterior Windows, Curtain Walls, and Doors.

ANTI-MICROBIAL. Treated with an anti-microbial additive to inhibit the growth of microorganisms.

ANSI/BHMA CERTIFIED. Certified gasketing complies with American National Standard for Door Gasketing and Edge Seal Systems ANSI/BHMA A156.22, and is listed in the BHMA Certified Products Directory.

Online product listings: www.ul.com/database

member BHMA builders hardware manufacturers association

LEED Green Building

The LEED (Leadership in Energy and Environmental Design) Green Building Rating System® is a national standard for developing high-performance, sustainable buildings developed by the U. S. Green Building Council.

Our current LEED letter containing LEED qualification information for all our products is available at www.ngp.com

Environmental Product Declarations (EPD) prepared and certified by an Independent Laboratory based on Life Cycle Assessments (LCA) of our products may be viewed on our website, www.ngp.com

Health Product Declarations (HPD) may be viewed on our website, www.ngp.com

National Guard Products sustainability report may be viewed on our website, www.ngp.com

Contact us regarding our end of use product recycling program.

NGP now offers complete solutions for excessive gaps

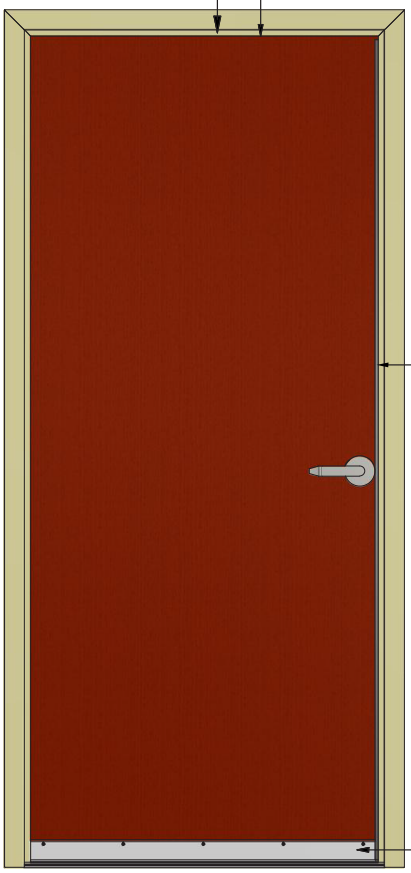

GAP 90™ SYSTEM
UL Certified – Gaps up to 5/16"

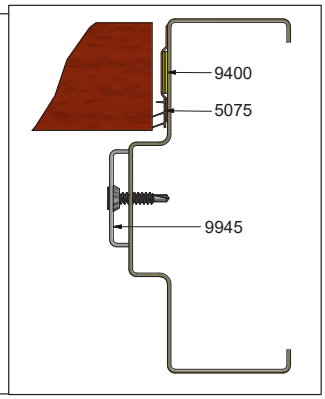

9990 DOOR TOP SYSTEM
UL Certified – Gaps up to 1/2"

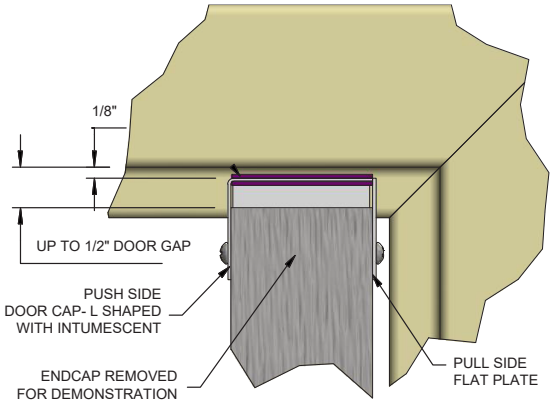

9590 DOOR BOTTOM SYSTEM
UL Certified – Gaps up to 1-1/2"

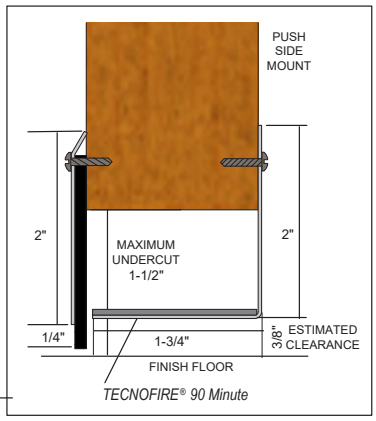

FIRE DOOR CLEARANCE REQUIREMENTS

BETWEEN DOOR & FRAME

WOOD DOORS = 1/8" MAX
METAL DOORS = 1/8" TO 3/16

UNDERNEATH DOOR

3/4" MAX

Gap Solution for Excessive Fire Door and Frame Clearances — 90 Minute

UL Certified Solution for Fire doors with Excessive clearance between door and frame over 1/8", up to 5/16"

Requires installation of ALL components below:

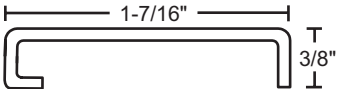

9945

Steel Stop Extender

Patent No.: US9,273,510B2

16 Gauge , Gray Primer Finish

Furnished with #10 X 1" TEK SMS

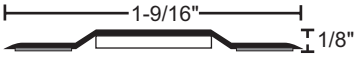

9400	Gray
9400DKB	Brown
9400W	White

NGP-Edge® Intumescent Seal with PVC cover

Anti-Microbial

Self-Adhesive - specifications on page G9

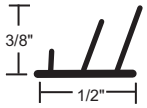

5075B	Brown
5075CL	Clear
5075W	White

Self-Adhesive TPE Seal

*Anti-Microbial not available in clear

INSTALLED VIEW

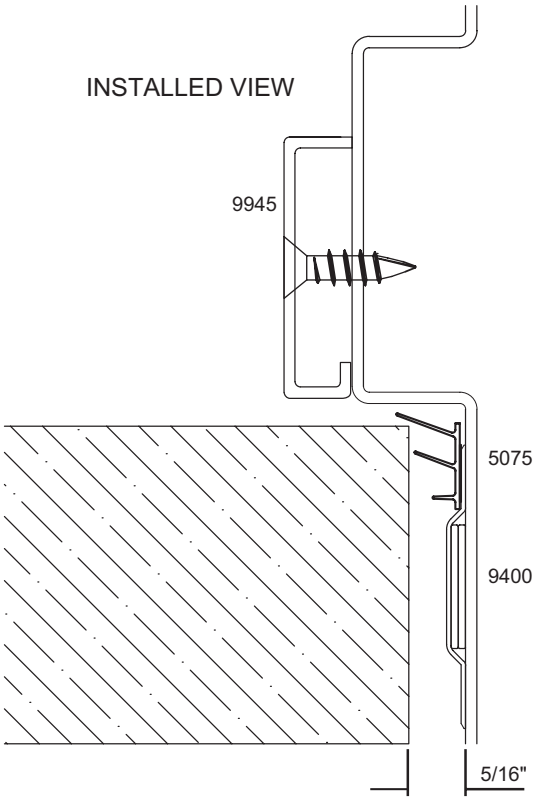

Ordering Information:

GAP90™	Includes 9945, 9400, 5075CL
GAP90DKB™	Includes 9945, 9400DKB, 5075B
GAP90W™	Includes 9945, 9400W, 5075W

Available in 36", 48", 84" and 96" lengths

90 minute rated UL Certified Miscellaneous Fire Door Accessory UL10B and UL10C wood or hollow metal fire doors

An NGP strike shim 9275 or 9225 is also required for proper latchbolt engagement

Certified for use on doors with Rim Exit Devices, refer to Installation Instructions.

Doors with Parallel arm closers – use 9990 shown on next page.

National Guard Products, Inc.
Phone: 800-647-7874
Fax: 800-255-7874
www.ngp.com
orders@ngp.com

Gap Solution for Excessive Fire Door Top Clearance — 90 Minute

UL Certified Solution for Fire doors with Excessive Door Top Clearances up to 1/2"

NGP-Edge® Intumescent Door Cap

Patent Pending

9990

90 minute rated UL10B and UL10C wood or hollow metal fire doors

Certified for use on doors with Concealed Vertical Rod Exit Devices or Automatic Flush Bolts, refer to Installation Instructions.

Non-Handed

Product consists of:

#304 Brushed Stainless Steel Flat Plate - pull side
#304 Brushed Stainless Steel Intumescent Cap - push side
#304 Brushed Stainless Steel End Caps

No need to move hardware at the top of the door.
Works on doors with Parallel arm closers.

Available in 36", 48" lengths

End caps furnished standard

#6 x 3/4" Stainless Steel SMS furnished

Brushed stainless steel

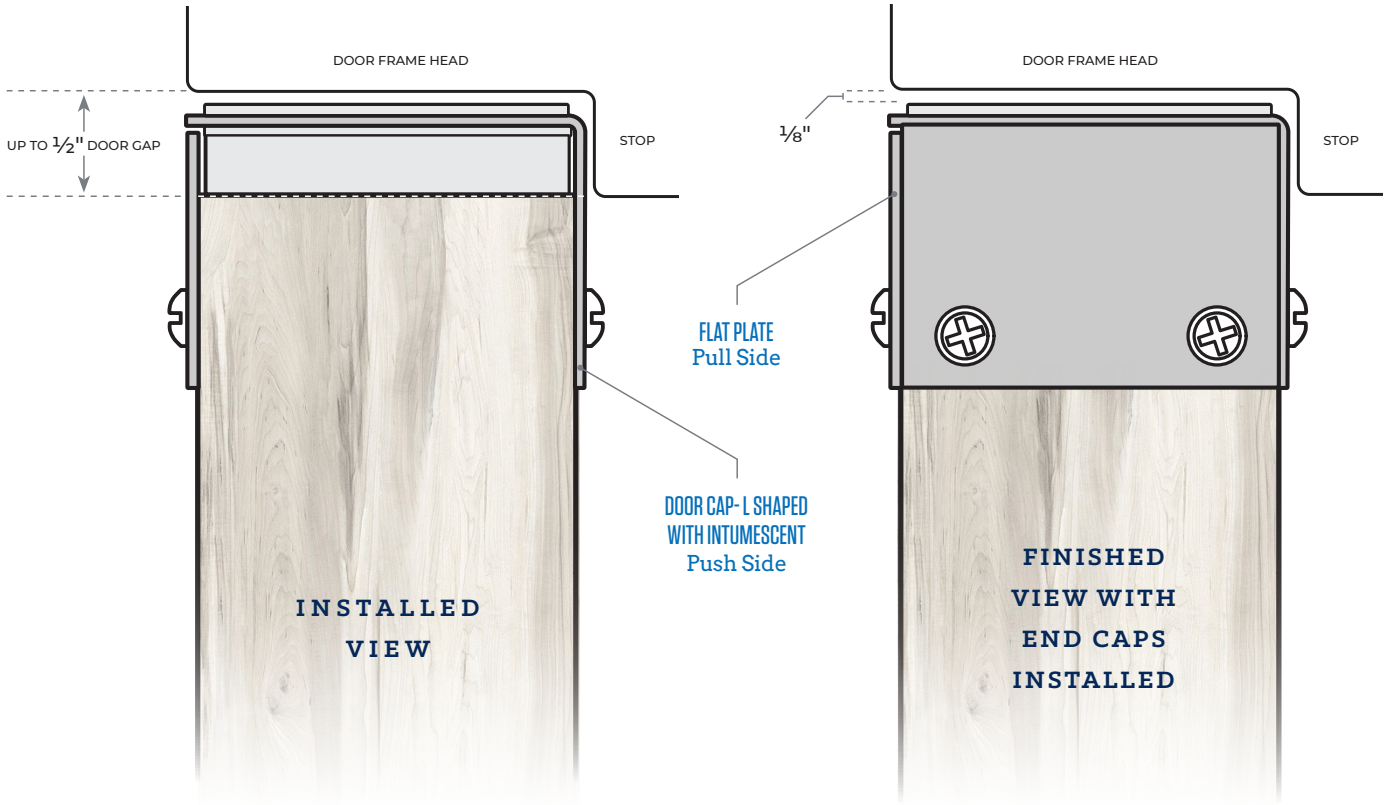

Gap Solution for Excessive Fire Door Bottom Undercut/Clearance — 90 Minute

UL Certified Solution for Fire doors with Excessive Door Bottom Clearances up to 1-1/2"

NGP-Edge® Intumescent Door Shoe

Patent Pending

9590

90 minute rated UL10B and UL10C wood or hollow metal fire doors

Certified for use on doors with Concealed Vertical Rod Exit Devices or Automatic Flush Bolts, refer to Installation Instructions.

Restricts the passage of smoke

Non-Handed

Product consists of:

#304 Brushed Stainless Steel Neoprene Sweep - pull side
#304 Brushed Stainless Steel Intumescent Shoe - push side
#304 Brushed Stainless Steel End Caps

Available in 36", 48" lengths

End caps furnished standard

#6 x 3/4" Stainless Steel SMS furnished

Brushed stainless steel
neoprene is black

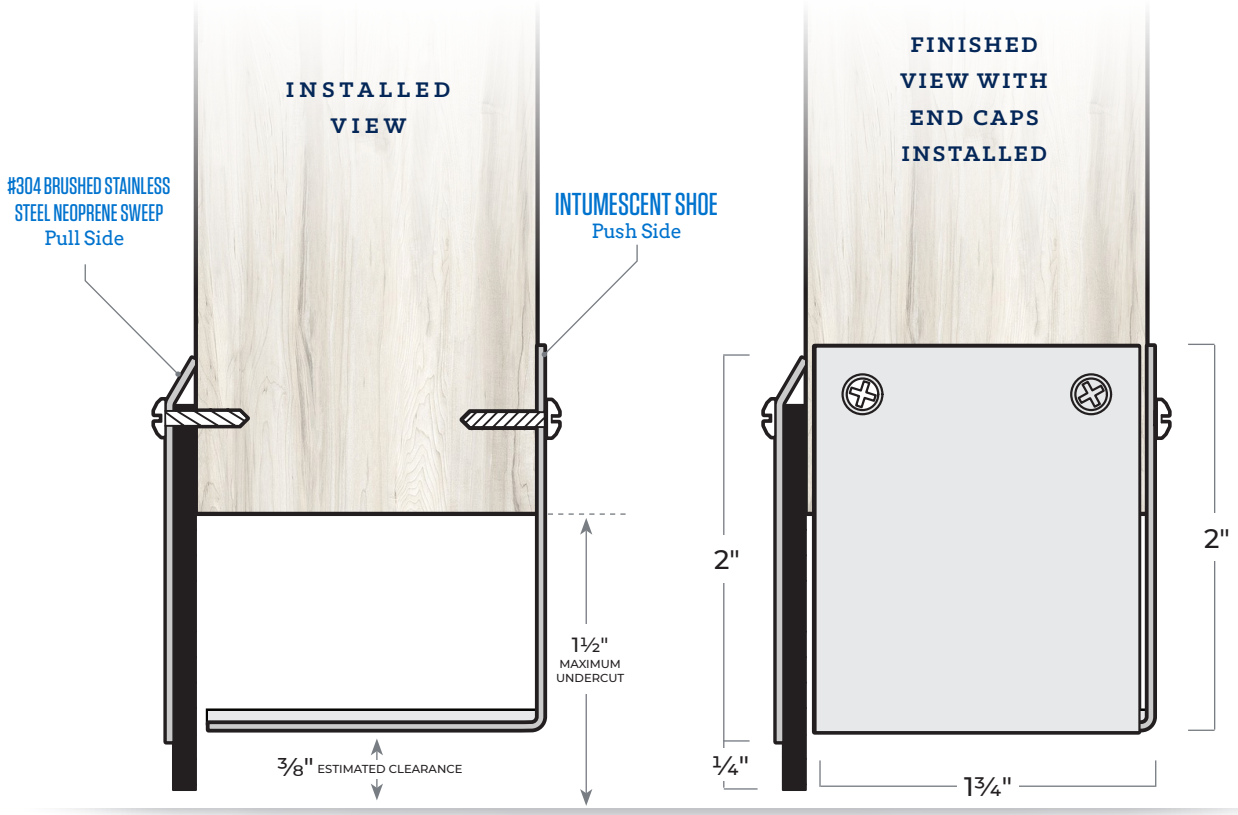

Strike Shims — 90 Minute

9275 - Fits 4-7/8" 'ASA' Strike Plate
9225 - Fits 2-3/4" 'T' Strike Plate

UL Certified Miscellaneous Fire Door Accessory for excessive door and frame clearances, measuring up to 5/16"

Required for proper latchbolt engagement.

90 minute rated UL10B and UL10C wood or hollow metal fire doors

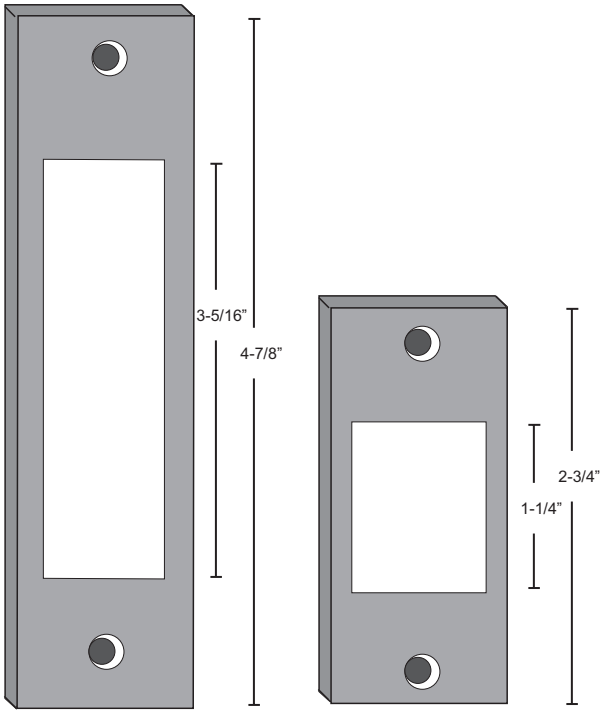

9275 Gray Paint finish

9225 Gray Paint finish

Fire Door Thru- Bolts

- Zinc Plated Steel Thru-Bolt Sleeve with Machine Screw
- Fits 1-3/4" to 2" thick doors
- Meets requirements of NFPA 80 for use on Fire Doors
- Use to fill holes in wood or steel fire doors to protect label compliance
- Available in boxes of twenty

FDTB 1/2"
FDTB 3/8"

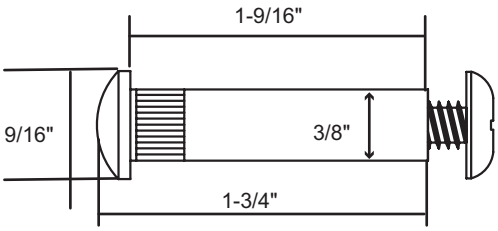

THREAD SIZE 1/4-20

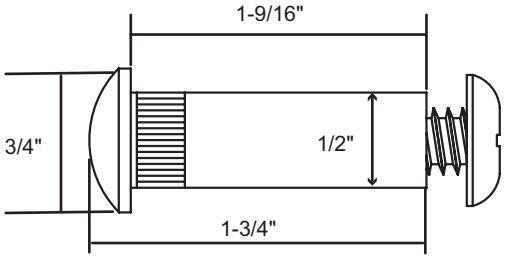

THREAD SIZE 5/16-18

Steel Hinge Shims

HS-1

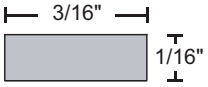

- Use to shim hinges to achieve required clearances between door and frame
- Dual purpose shim:
  - Use full 42" length for continuous hinges
  - Break-off 3-1/2" sections for butt hinges
- Steel fire-rated shims
- Pressure sensitive adhesive pads included for holding in place during installation
- Removable, re-stickable, and stackable
- Available in boxes of ten

UL Certified Miscellaneous
Fire Door Accessory

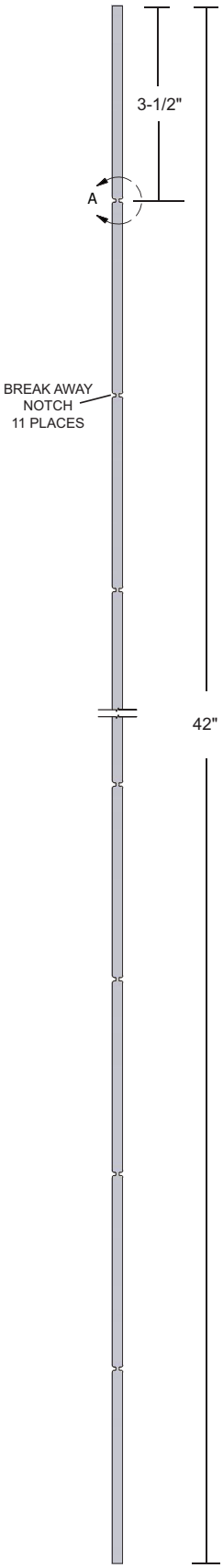

DoorGap Gauge®

Patented tool easily measures gap for fire door inspections.

The Only Gauge You Will Need to Check Fire Door Assembly Clearance Requirements

Installers

- A sure way to check Fire Door Clearance Requirements before inspection

Inspectors

- Will speed up your inspections
- More accurate than a tape measure
- Compact and easy to use

Distributors

- Supply with job to ensure Fire Assemblies are installed per Fire Door Requirements

The DoorGap Gauge® can also be used to:

Check life safety egress assemblies
Check other construction assemblies requiring specific clearances and operational tolerances.

GAP GAUGE

(US Patent #7591073)

Common Questions

Gaps - Perimeter vs. Door Bottom?

Perimeter gaps in doors are the distance between the edge of the door and door frame as measured on the pull side of the opening. Door bottom gaps are the distance between the bottom of the door and the finish floor.

Gaps - Why are they important?

Proper gap tolerances ensure that the door will perform as it is intended. Gaps that are outside of tolerance can lead to compromised fire door integrity in a fire situation as well as not allowing the fire door latching mechanism to engage fully as it is required to do by code.

Gaps - What does the code say?

NFPA 80 (the code standard for fire doors) states that fire doors must be inspected on an annual basis. Maximum allowable perimeter gap is 1/8" for wood doors, 1/8" +/- 1/16" for metal doors. Maximum allowable door bottom gap is 3/4". Gaps that exceed these maximum allowable tolerances result in a non-compliant fire door that needs to be repaired.

Inline Mounting Bracket

Allows Parallel Arm Closer Mounting When Using GAP90

- Patent No. 9109388
- Low Profile Appearance: The 600D Inline Bracket mounts directly through the 9945 Steel Stop Extender when mounting door hardware to the soffit
- Soffit widths are not a concern. The 600D is specified for all frame dimensions eliminating the need for two different style mounting brackets
- Requires one bracket for each soffit applied hardware item
- May also be used with 9945 steel stop extender and a door coordinator
- Finish: powder coat gray
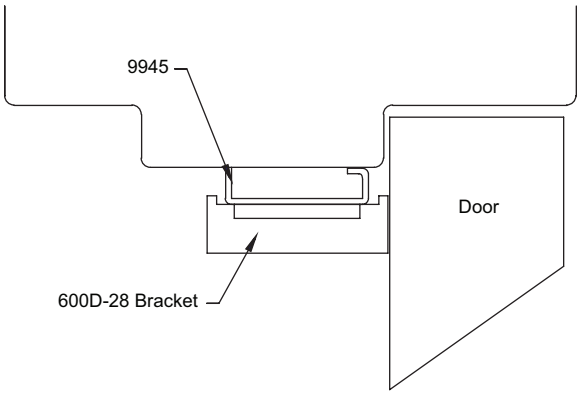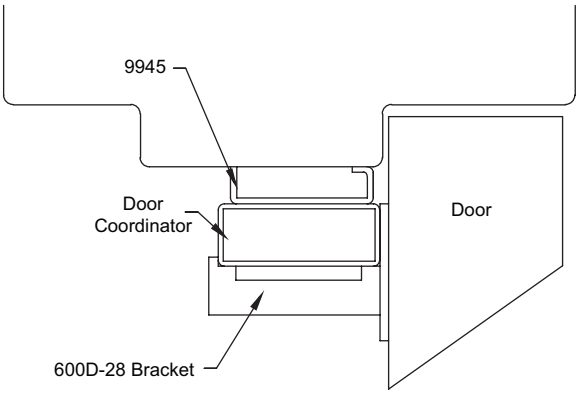
600D-28